Antron Electronics Co.,LTD
安雄電子股份有限公司

Constant Current LED Driver

Model Name	AC2800S150D
Output Mode	Constant Current
Input Voltage	120-277 Vac
Input Frequency	50/60 Hz
Dimming	3 in 1 (PWM, 1-10V, Resistance)
Surge Rating	3KV
Warranty	5 Years TC≦75˚C 3 Years 75˚C≦TC≦90˚C

Product Specification

Output Power (W)	Output Voltage (V)	Output Current (A)	Start Temp. (˚F/˚C)	Tcase Temp. (˚F/˚C)	Input Current (A)	Input Power (W)	Inrush Current (A)	THD (%)	Power Factor	Efficiency (%)
150	32-54	2.8	Min -40/-40	Max. 194/90	1.46@120V 0.64@277V	170	Max. 45@277V	Max. 20	Min. 0.9	Typ. 88

Wire Diagram

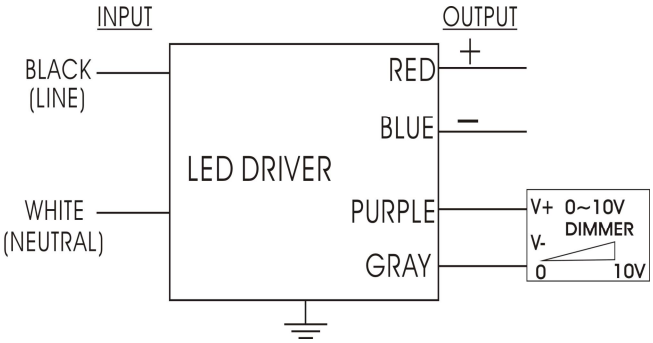

Maximum Wiring Distance(at full load) is 18AWG/18Feet

Lead Length	Inch	Cm
Black	5.9	15
White	5.9	15
Green	NA	NA
Red	5.9	15
Blue	5.9	15
Purple	7.1	18
Gray	7.1	18

Enclosure

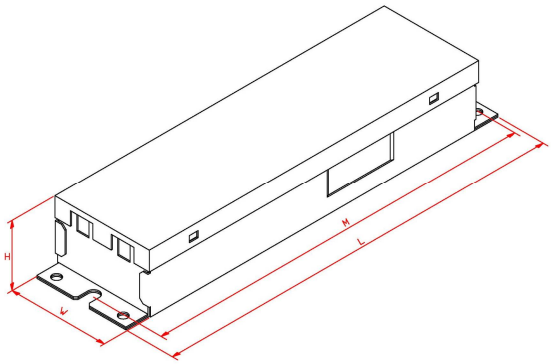

Enclosure	Inch	Cm
Length(L)	9.5	24.1
Width(W)	2.4	6.1
Height(H)	1.57	4.0
Mounting(M)	8.9	22.6

Revised 2018/08/21

www.antron.com.tw Tel:886-6-726-3906/7 Fax:886-6-726-3908 info@antron.com.tw